RAINWATER IN RESIDENTIAL GARDENS

An asset and an opportunity!

SHERWOOD
DESIGN ENGINEERS

Rainwater in residential gardens

- Celebrate the natural patterns of flow
- Restore regional ecological systems
- Increase recharge of groundwater basins
- Reduce downstream flooding and erosion
- Manage pollutant loads from fertilizers and pesticides

Slow, spread, sink rain into the earth

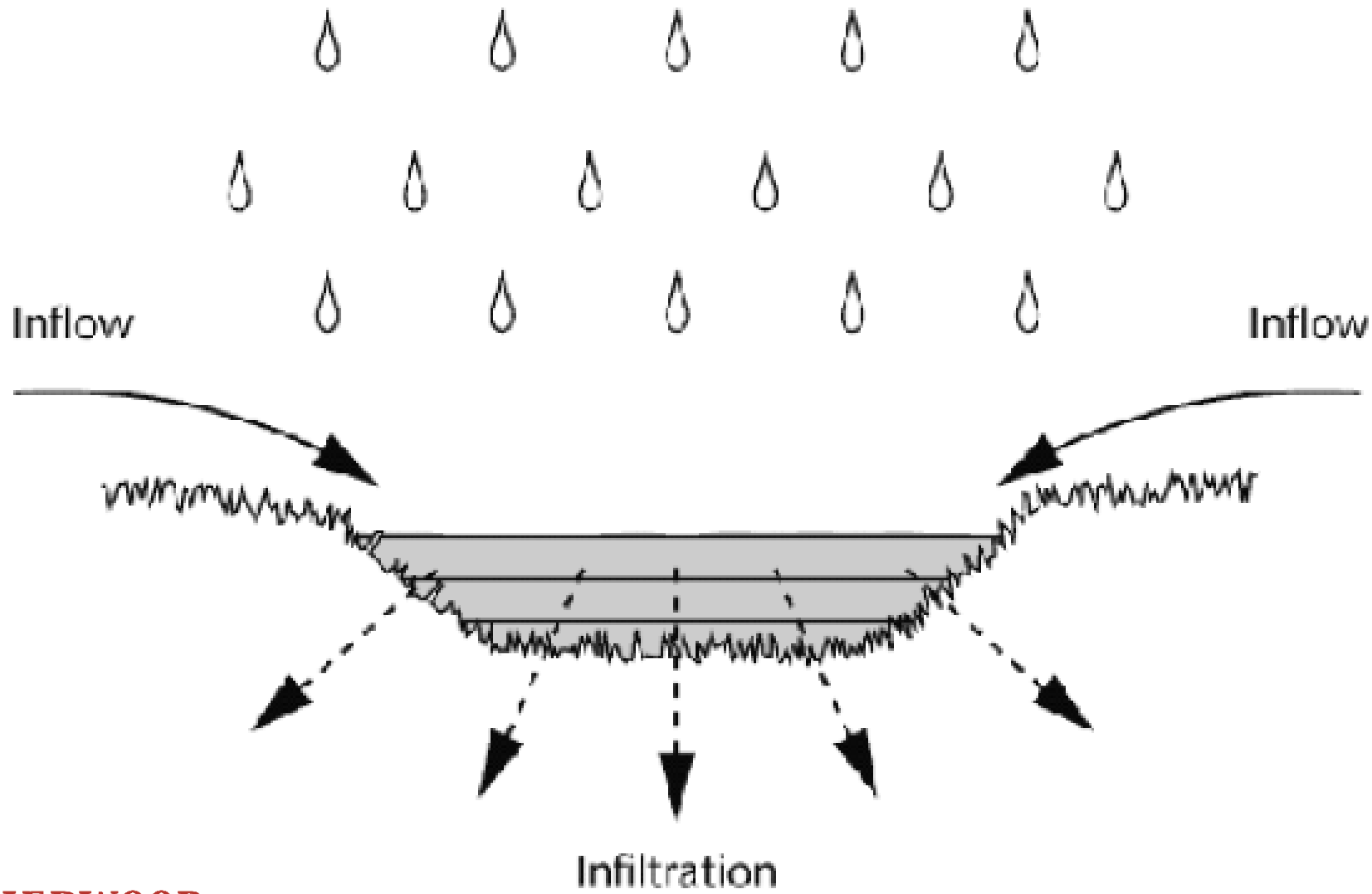

SHERWOOD
DESIGN ENGINEERS

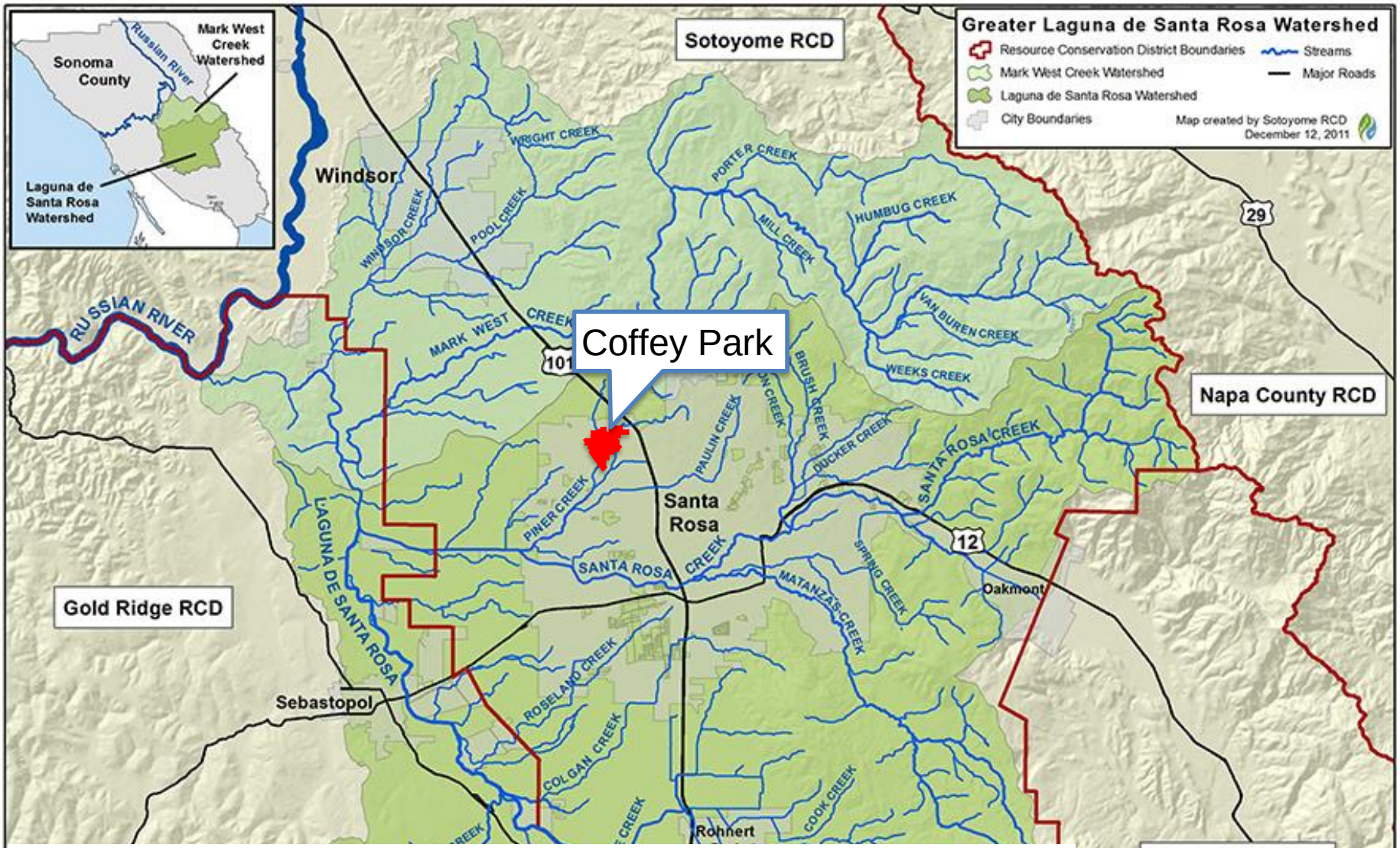

Coffey Park → Piner Creek→ Santa Rosa Creek → Laguna de Santa Rosa → Russian River → Pacific Ocean

Coffey Park – Back of the envelope calculation

Coffey Park	Acres (Total 262)	Percentage of total
Buildings	63	24%
Hardscape	46	18%
Roads	40	15%

(Numbers reflect conditions before the fire)

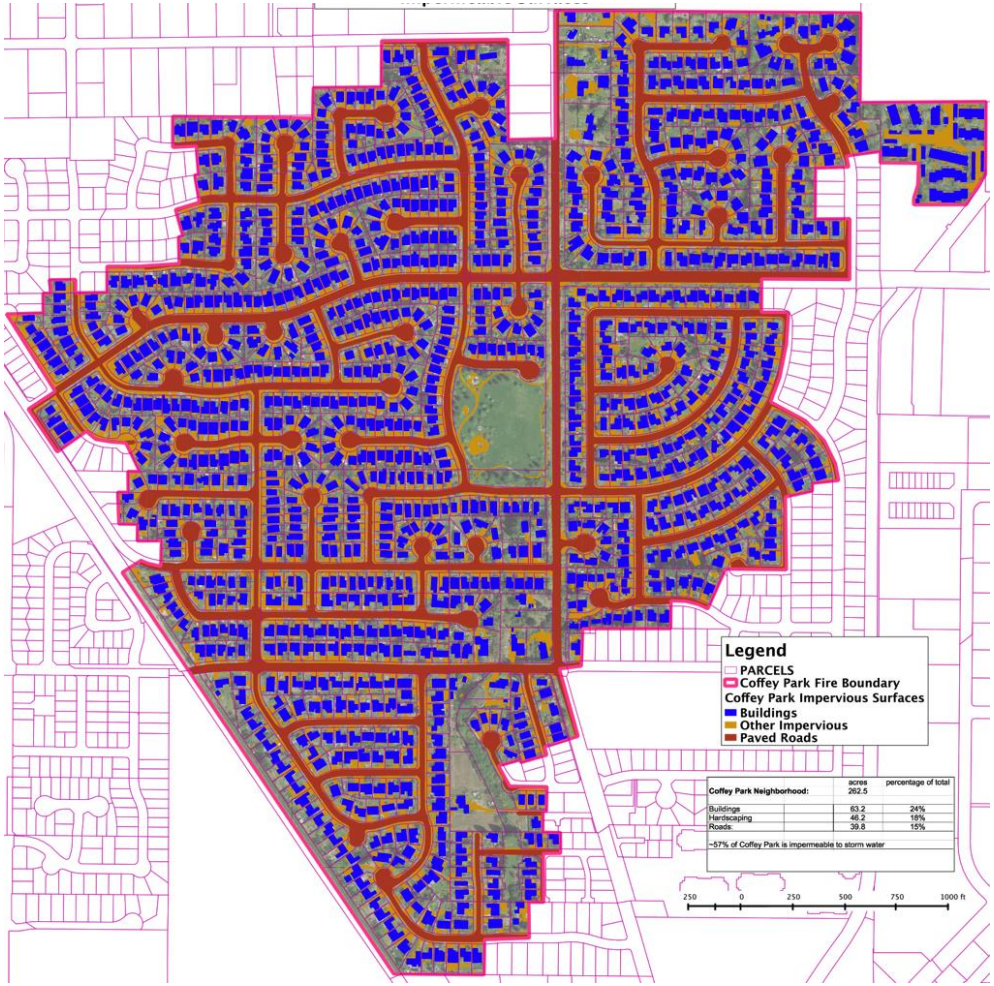

SHERWOOD DESIGN ENGINEERS

Sonoma Veg Map

Coffey Park – Back of the envelope calculation

- 40% (~100 ac) of Coffey Park is **im**permeable to stormwater (roads deducted)
- 4% rule = 4 acres of raingardens total
- Per 6,000 sf residential lot = 240 sf of raingarden
- Design storm: 1” depth
- Implementing green infrastructure would allow ~ **8 acre feet** of water or **2,600,000 gallons** detained/retained per storm
- = Annual water use of 26 families in Santa Rosa

SHERWOOD
DESIGN ENGINEERS

Sustainable Design Elements

- Disconnected downspouts
- Raingardens & Swales
- Permeable paving
- Rainwater Harvesting

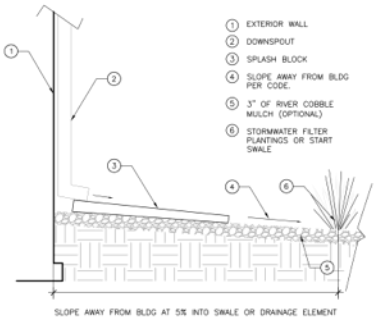

1 DOWNSPOUT SPLASHBLOCK TO OVERLAND FLOW
SCALE: 1/2"=1'-0"

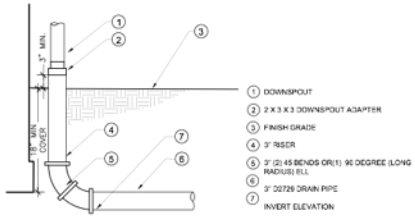

2 DOWNSPOUT WITH PIPED OUTLET
SCALE: 1/2" = 1'-0"

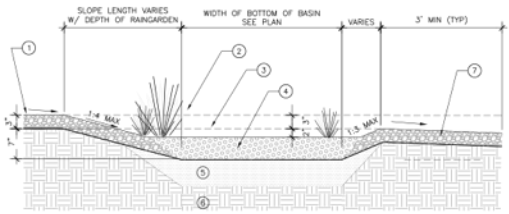

3 VEGETATED RAINGARDEN W/ OVERLAND FLOW INLET & OUTLET
SCALE: 1/2"=1'-0"

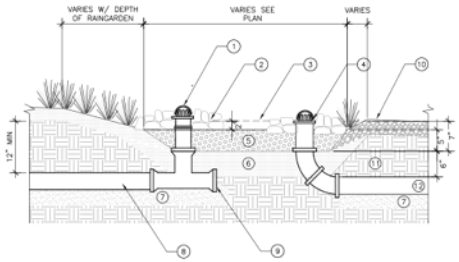

4 VEGETATED RAINGARDEN W/ PIPED INLET
SCALE: 1/2"=1'-0"

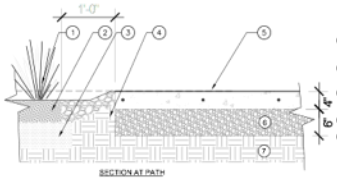

5 RAINGARDEN OVERFLOWING OVER PAVEMENT SECTION
SCALE: 1/2"=1'-0"

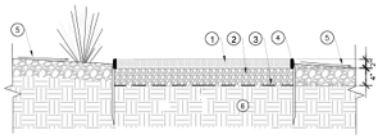

6 RAINWATER FLOW THRU PERMEABLE PAVING SECTION
SCALE: 1"=1'-0"

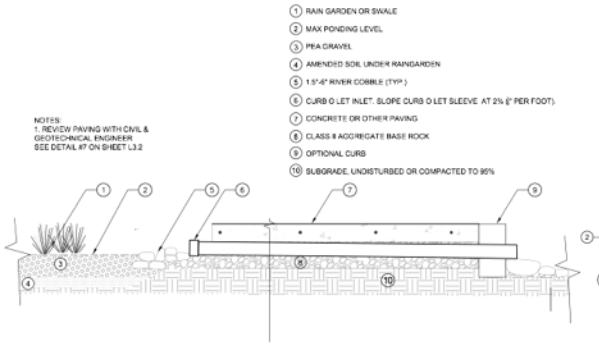

7 DRAIN SLEEVE THRU PATH FROM RAINGARDEN
SCALE: 1/2"=1'-0"

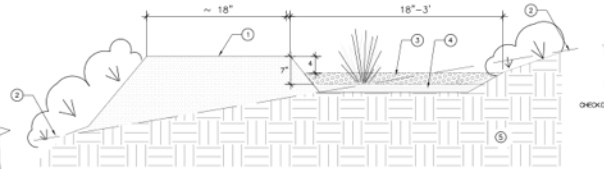

8 SWALE/CASCADE ON SLOPE - SECTION
1/2"=1'-0"

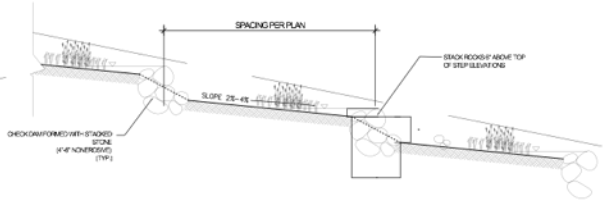

9 SWALE/CASCADE ON SLOPE - LONGITUDINAL SECTION
1/2"=1'-0"

ABLA
ANN BAKER LANDSCAPE ARCHITECTURE
625 2ND ST., STE 110
PETALUMA, CA 94952
TEL.: (707) 775-5362
EMAIL: bridgecities@gmail.com

daily acts
because every choice matters

ForeSite
digital mapping solutions

Equinox LANDSCAPE

SHERWOOD DESIGN ENGINEERS

P D G
PANORAMIC DESIGN GROUP
LANDSCAPE ARCHITECTURE

RESIDENTIAL LANDSCAPE DESIGN TEMPLATE
Sonoma-Marin Saving Water Partnership
www.savingwaterpartnership.org

NAME: _____

SITE ADDRESS: _____

SONOMA - MARIN SAVING WATER PARTNERSHIP

SHEET TITLE:
RAIN GARDENS & SWALE DETAILS

DATE
PERMIT PLAN
MAY 18, 2018

L-3.1

SHEET
OF

SHERWOOD
DESIGN ENGINEERS

Disconnected Downspouts

Disconnected Downspouts

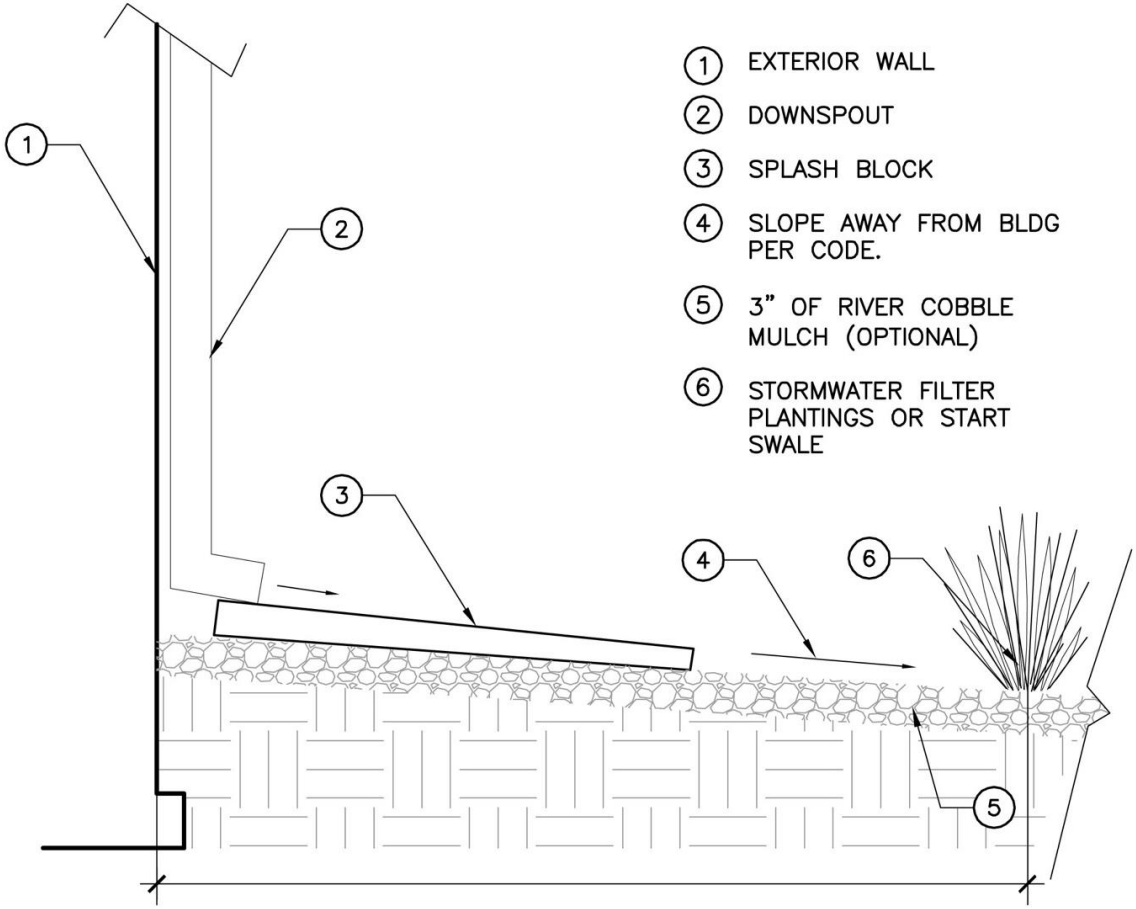

1 SCALE: N.T.S. DOWNSPOUT SPLASHBLOCK TO OVERLAND FLOW (OPTIONAL)

SHERWOOD DESIGN ENGINEERS

7

Raingarden

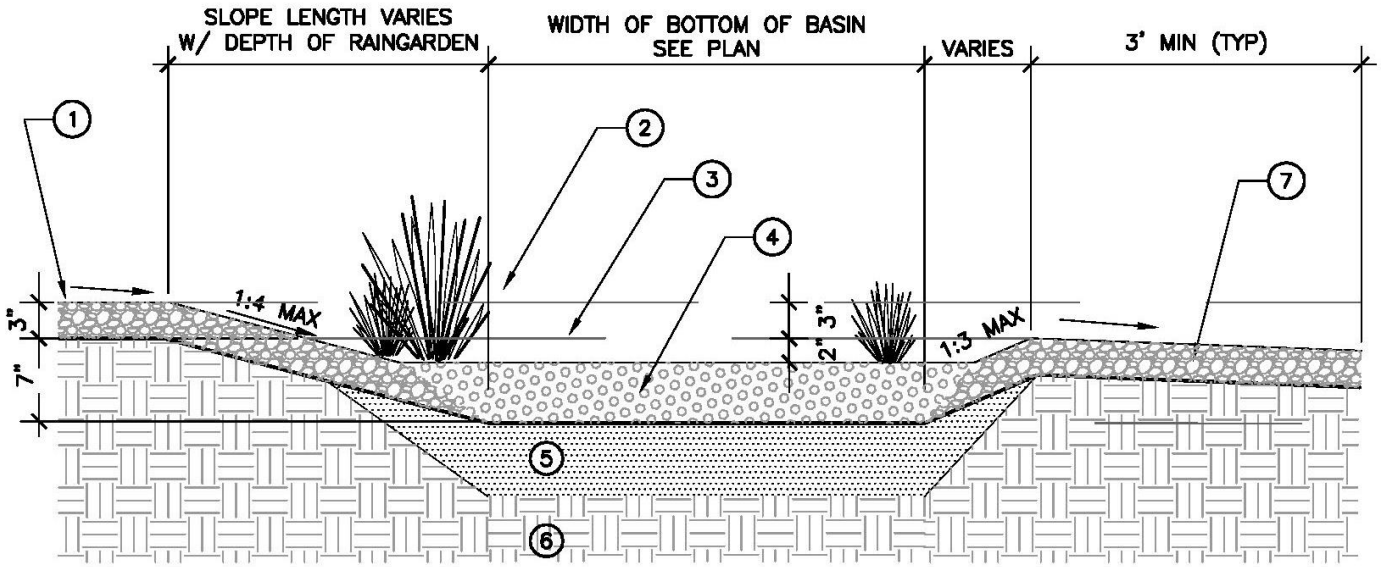

3 VEGETATED RAINGARDEN W/ OVERLAND FLOW INLET AND OUTLET (OPTIONAL)

SCALE: NONE

SHERWOOD
DESIGN ENGINEERS

Piped Condition

Piped Condition

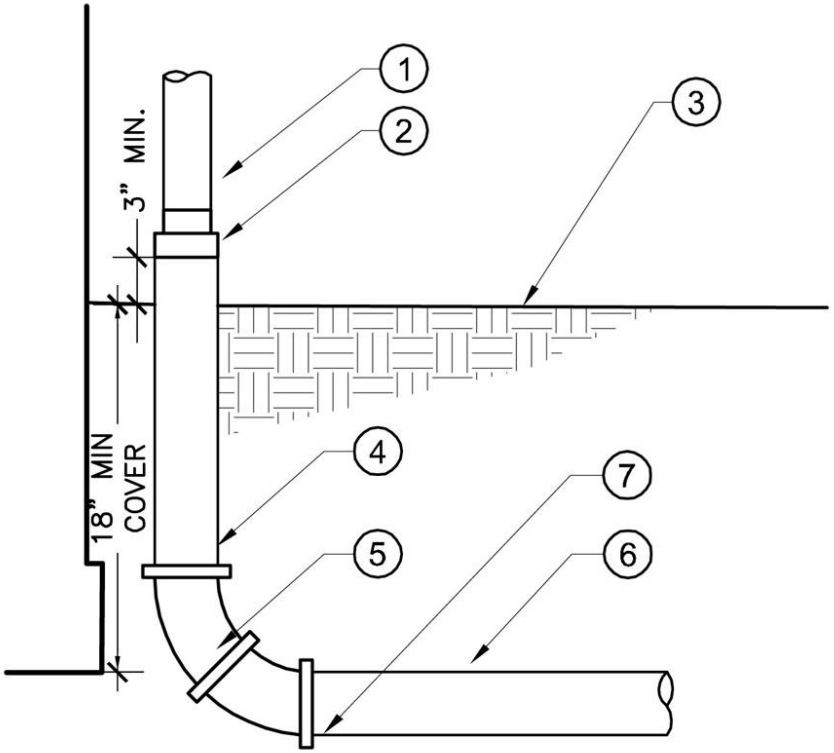

1. DOWNSPOUT
2. 2 X 3 X 3 DOWNSPOUT ADAPTER
3. FINISH GRADE
4. 3" RISER
5. 3" (2) 45 BENDS OR(1) 90 DEGREE (LONG RADIUS) ELL
6. 3" D2729 DRAIN PIPE
7. INVERT ELEVATION

2 DOWNSPOUT WITH PIPED OUTLET (OPTIONAL)
SCALE: N.T.S.

SHERWOOD
DESIGN ENGINEERS

Piped Condition

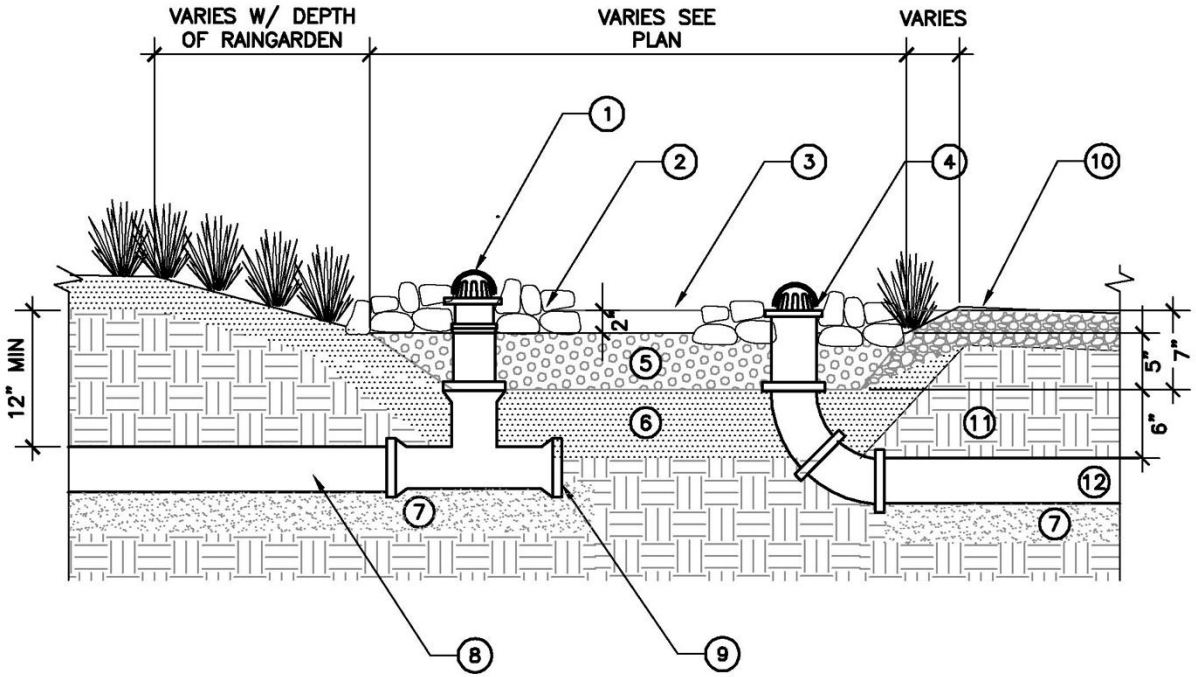

4 VEGETATED RAINGARDEN W/ PIPED INLET (OPTIONAL)

SCALE: N.T.S.

SHERWOOD DESIGN ENGINEERS

Conveyance in hardscape

Conveyance in hardscape

1. RAIN GARDEN OR SWALE
2. MAX PONDING LEVEL
3. PEA GRAVEL
4. AMENDED SOIL UNDER RAINGARDEN
5. 1.5"-6" RIVER COBBLE (TYP.)
6. CURB O LET INLET. SLOPE CURB O LET SLEEVE AT 2% ($\frac{1}{4}$" PER FOOT).
7. CONCRETE OR OTHER PAVING
8. CLASS II AGGREGATE BASE ROCK
9. OPTIONAL CURB
10. SUBGRADE, UNDISTURBED OR COMPACTED TO 95%

NOTES:
1. REVIEW PAVING WITH CIVIL & GEOTECHNICAL ENGINEER
SEE DETAIL #7 ON SHEET L3.2

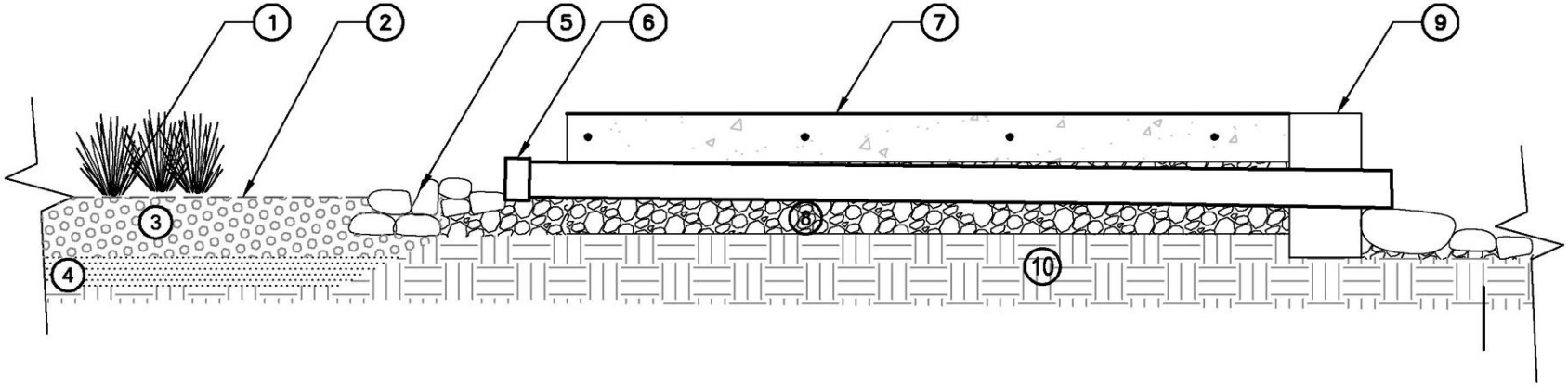

7 DRAIN SLEEVE THRU PATH FROM RAINGARDEN (OPTIONAL)

SCALE: N.T.S.

SHERWOOD DESIGN ENGINEERS

Conveyance in hardscape

1. CONCRETE DRIVEWAY - DESIGN BY OTHERS. SEE NOTE 2 AND GENERAL NOTES THIS PAGE.
2. TRENCH DRAIN, SIZE TBD BY OTHERS, SEE NOTE 1.
3. EXPANSION JOINT REQUIRED. SEE NOTE 2.
4. COMPACTED SUBGRADE - DESIGN BY OTHERS. SEE NOTE 2.

NOTES:
1. TRENCH DRAIN: K50 BY ACO POLYMER PRODUCTS, INC, OR EQUAL. REFER TO MANUFACTURER'S LATEST INSTALLATION INSTRUCTIONS FOR DETAILS.
2. DRIVEWAY ENGINEERING BY OTHERS. INSURE PROPER DESIGN FOR LOAD AND SOILS, PLACEMENT OF EXPANSION JOINTS AND REINFORCEMENT.

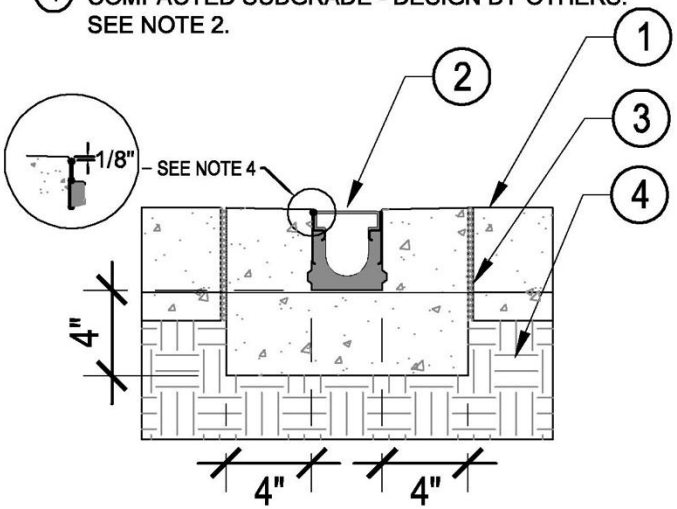

SECTION

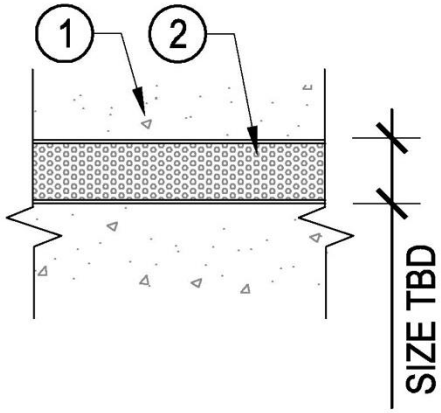

PLAN

8 CONCRETE - VEHICLE - TRENCH DRAIN (OPTIONAL)

SCALE: 1"=1'-0"

SHERWOOD DESIGN ENGINEERS

Conveyance in hardscape

1. PERMEABLE AGGREGATE PAVING: 2" THICK OF 3/8" OR SMALLER AGGREGATE (NO FINES)
2. 4" CLASS II PERMEABLE AGGREGATE BASE ROCK, COMPACT TO 95%.
3. FILTER FABRIC
4. EDGING AND STAKE (OPTIONAL)
5. RAINWATER FLOWING WITHIN 4" OF 1.5"-6" RIVER COBBLE FROM DOWNPOUT OR RAINGARDEN
6. NATIVE SOIL; SCARIFY TOP 3" TO IMPROVE INFILTRATION UNDER COBBLE

NOTE:
1. REVIEW DETAIL WITH GEOTECH. & CIVIL ENGINEER
2. SITE 10' AWAY FROM FOUNDATION.

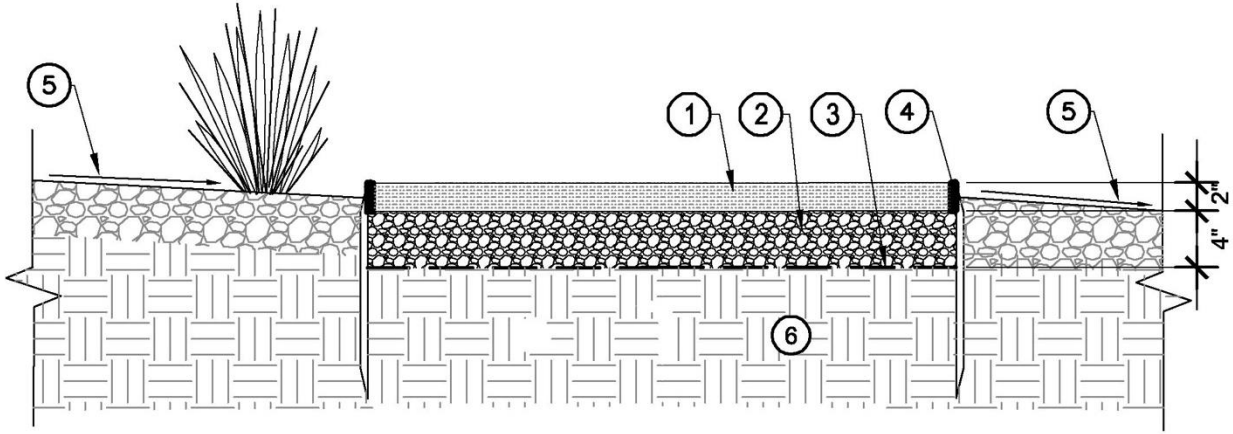

6 RAINWATER FLOW THRU PERMEABLE PAVING SECTION (OPTIONAL)

SCALE: 1"=1'-0"

SHERWOOD DESIGN ENGINEERS

Swales on Slopes

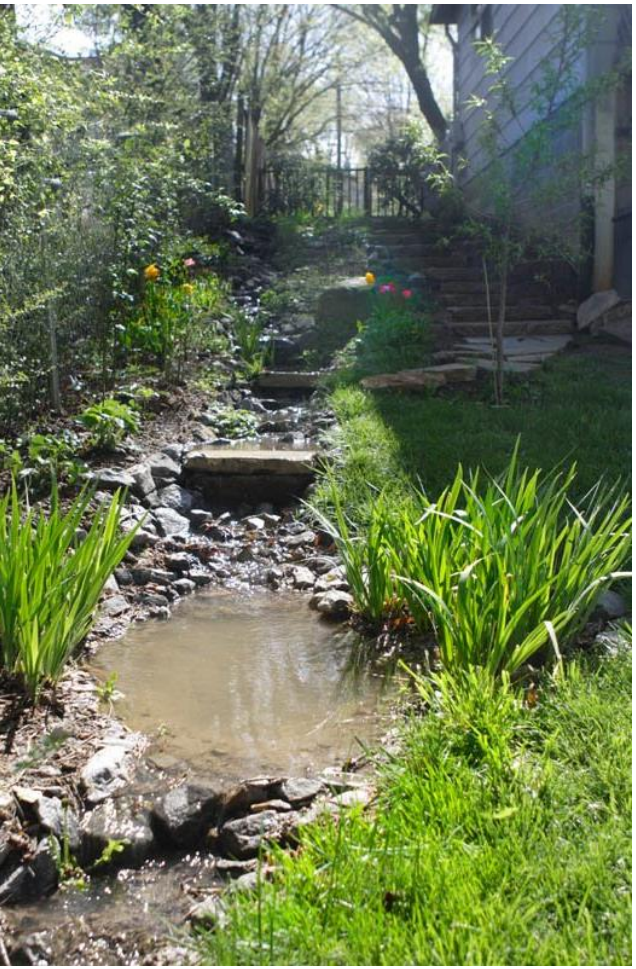

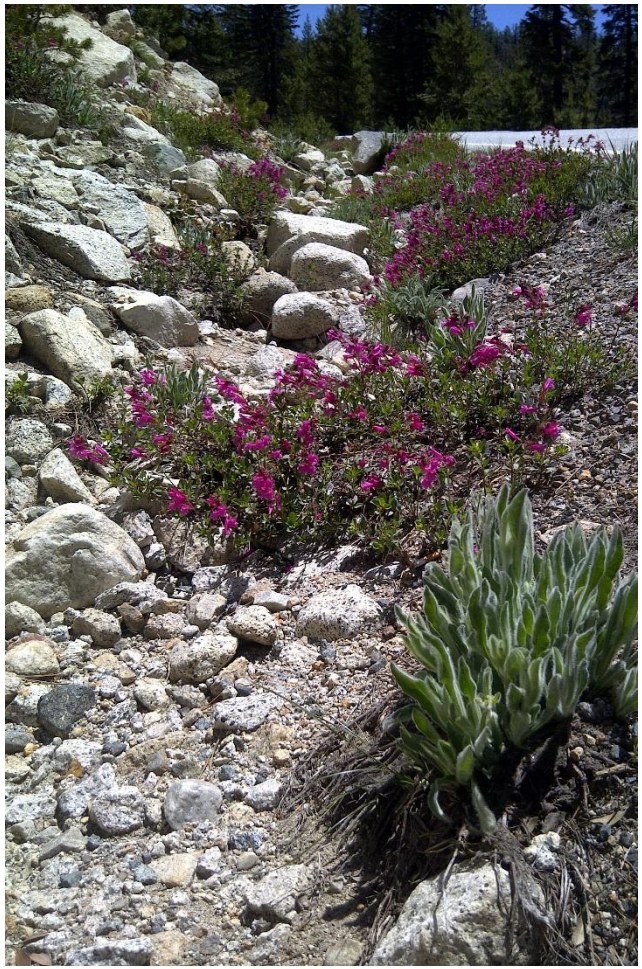

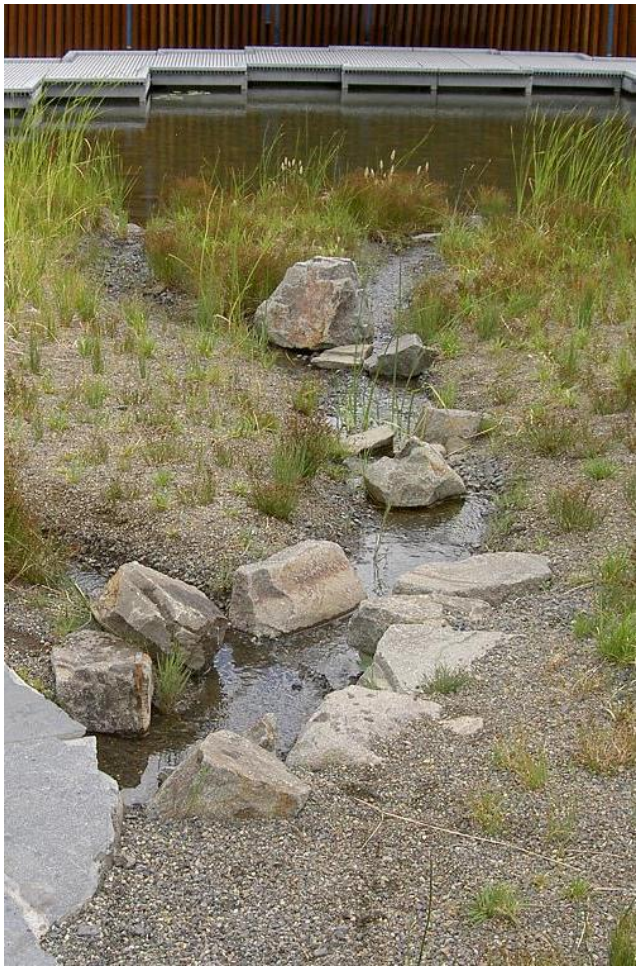

SHERWOOD
DESIGN ENGINEERS

Swales on Slopes

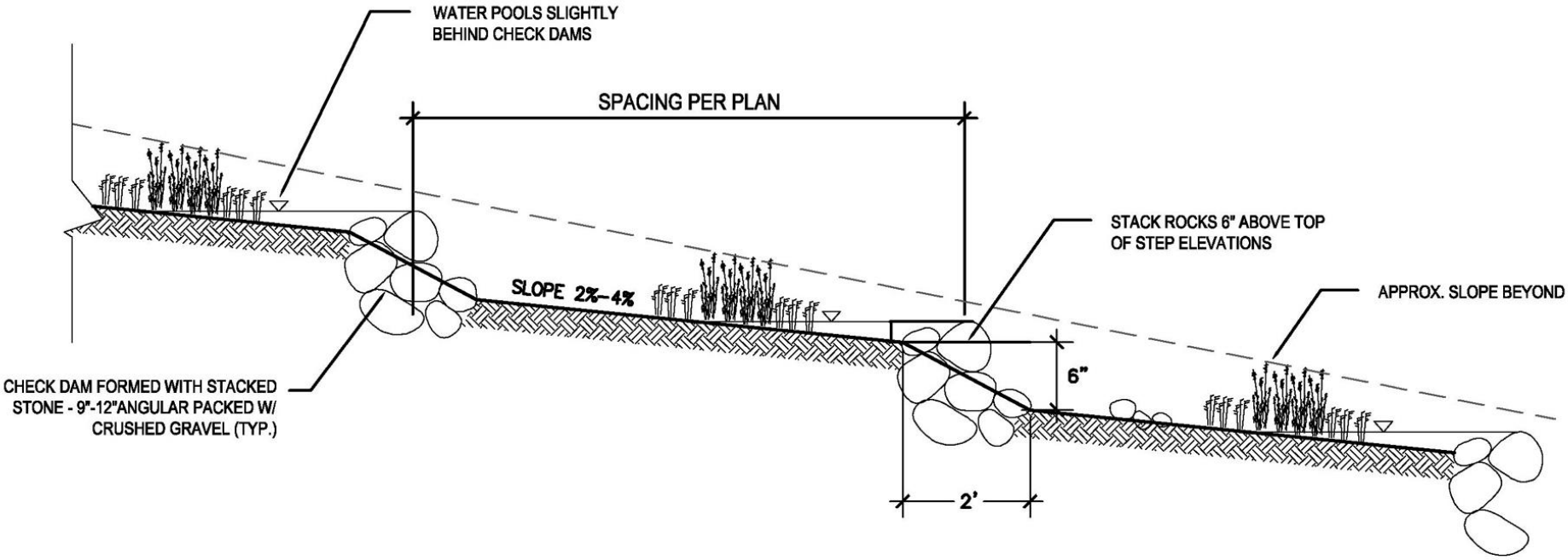

9 SWALE/CASCADE ON SLOPE - LONGITUDINAL SECTION (OPTIONAL)

SCALE: N. T. S.

SHERWOOD
DESIGN ENGINEERS

Swales on Slopes

NOTES:
1. MINIMUM SLOPE IN THE DIRECTION OF FLOW TO BE 0.5%. IF SLOPE EXCEEDS 2% STEP DOWN IN CASCADE PER DETAIL # 9 THIS PAGE.
2. NO WOOD CHIP OR BARK MULCH IN RAINWATER SYSTEMS TO AVOID CLOGGING STORM DRAINS.

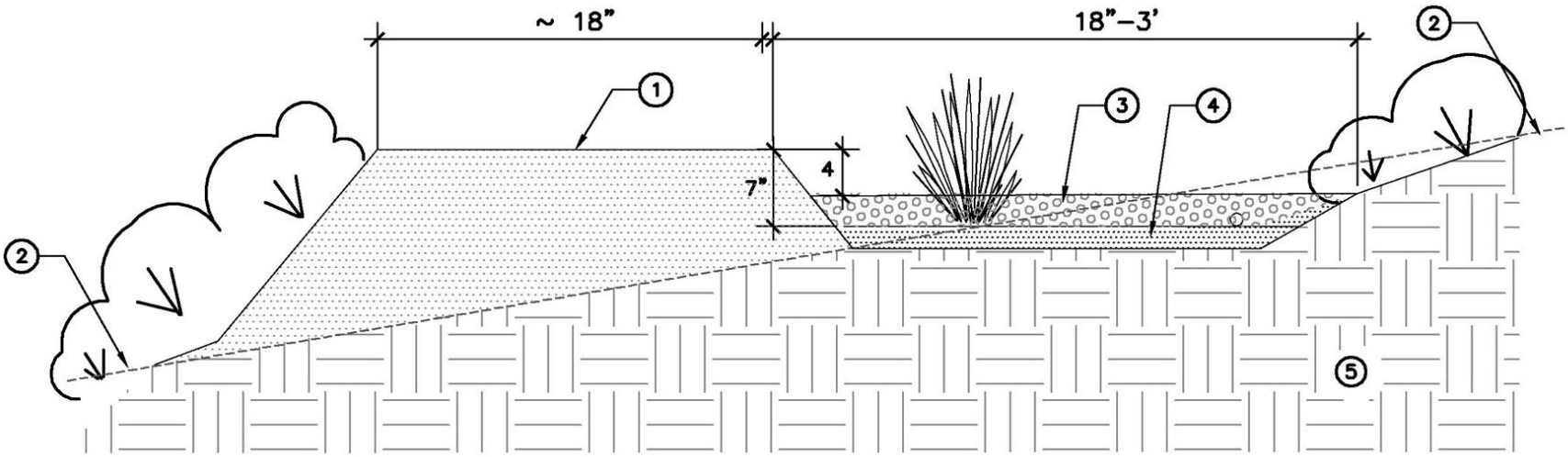

8 SWALE/CASCADE ON SLOPE - SECTION (OPTIONAL)

SCALE: NONE

SHERWOOD
DESIGN ENGINEERS

Permeable Paving

Permeable Paving

1. STABILIZED 3/8-" AGGREGATE; TERRAPAVE, ECO-PAVE OR EQUAL STABILIZING PRODUCT APPLIED PER MANUFACTURER SPECIFICATION. SLOPE TO PLANTINGS @ 1.5%.
2. CLASS II RECYCLED AGGREGATE BASE, COMPACT TO 95%
3. SUBGRADE; UNDISTURBED OR COMPACTED TO 95%
4. METAL EDGE, 1/8" X 4", ALUMINUM, STEEL OR ALTERNATE
5. AMENDED SOIL OF ADJACENT PLANTING; SLOPE AWAY FROM PATH 2% MIN.

NOTES:
1. THIS PAVING IS IMPERVIOUS AND SHOULD HAVE POSITIVE DRAINAGE AWAY FROM BUILDING FOUNDATIONS.
2. FOR DRAINAGE THRU PATH SEE CURB O LET DETAIL #11 THIS PAGE AND SECTION VIEW IN DETAIL #1

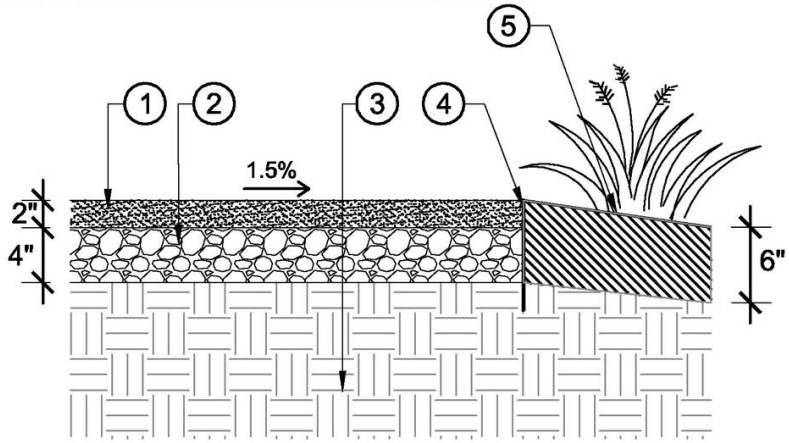

5 STABILIZED AGGREGATE - PATH OR PATIO (OPTIONAL)

SCALE: 1"=1'-0"

SHERWOOD DESIGN ENGINEERS

Permeable Paving

1. CONCRETE UNIT PAVER: SELECT PERVIOUS PAVERS OR PERMEABLE PAVERS. INSTALL PER MANUFACTURER'S INSTRUCTIONS.
2. JOINTS PER MANUFACTURER'S INSTRUCTIONS.
3. METAL EDGING. OPTIONAL CONCRETE CURB.
4. SHOULDER, FINISH GRADE
5. SAND SETTING BED PER MANUFACTURER'S INSTRUCTIONS
6. PERMEABLE CLASS II AGGREGATE BASE ROCK, COMPACTED TO 95%
7. FILTER FABRIC
8. COMPACTED SUBGRADE TO 90%

NOTE: CONSULT WITH GEOTECHNICAL & CIVIL ENGINEER FOR AGGREGATE BASE DEPTH, PERFORMANCE IN CLAY SOILS AND NEED FOR SUBDRAINS

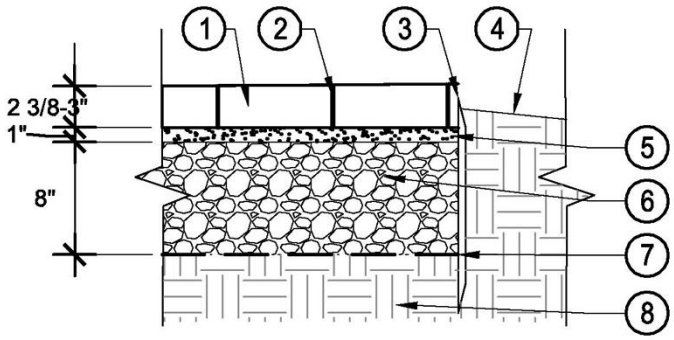

7 PERVIOUS OR PERMEABLE UNIT PAVER - VEHICLE (OPTIONAL)

SCALE: 1"=1'-0"

SHERWOOD DESIGN ENGINEERS

Permeable Paving

1. GRAVEL PAVE XL PAVING SYSTEM. OR APPROVED EQUAL. AGGREGATE FILL SELECTED BY OWNER. INSTALL PER MANUFACTURER'S INSTRUCTIONS.
2. PERMEABLE CLASS 2 AGGREGATE BASE ROCK. COMPACT TO 95%
3. SUBGRADE UNDISTURBED OR COMPACTED TO 90%
4. 2X6 RDW HEADER, 18" STAKES @ 6' O.C., SCAB AT OVERLAPPING ENDS AND STAKE AT 3' O.C OPTIONAL CONCRETE CURB.
5. ADJACENT PLANTING AREA

NOTE: CONSULT WITH GEOTECHNICAL & CIVIL ENGINEER FOR AGGREGATE DEPTH, PERFORMANCE IN CLAY SOILS AND NEED FOR SUBDRAINS.

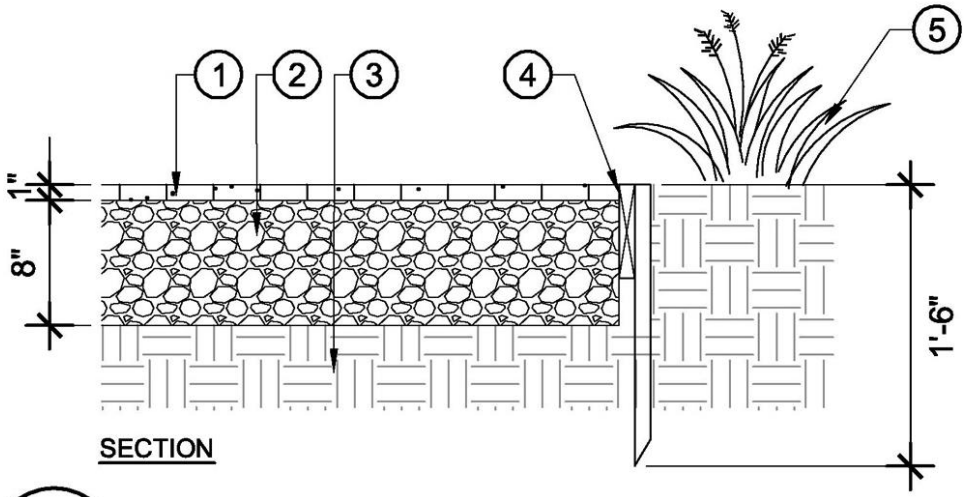

6 GRAVELPAVE PAVING - VEHICLE (OPTIONAL)
SCALE: 1"=1'-0"

SHERWOOD
DESIGN ENGINEERS

Rainwater Harvesting

Rainwater Harvesting

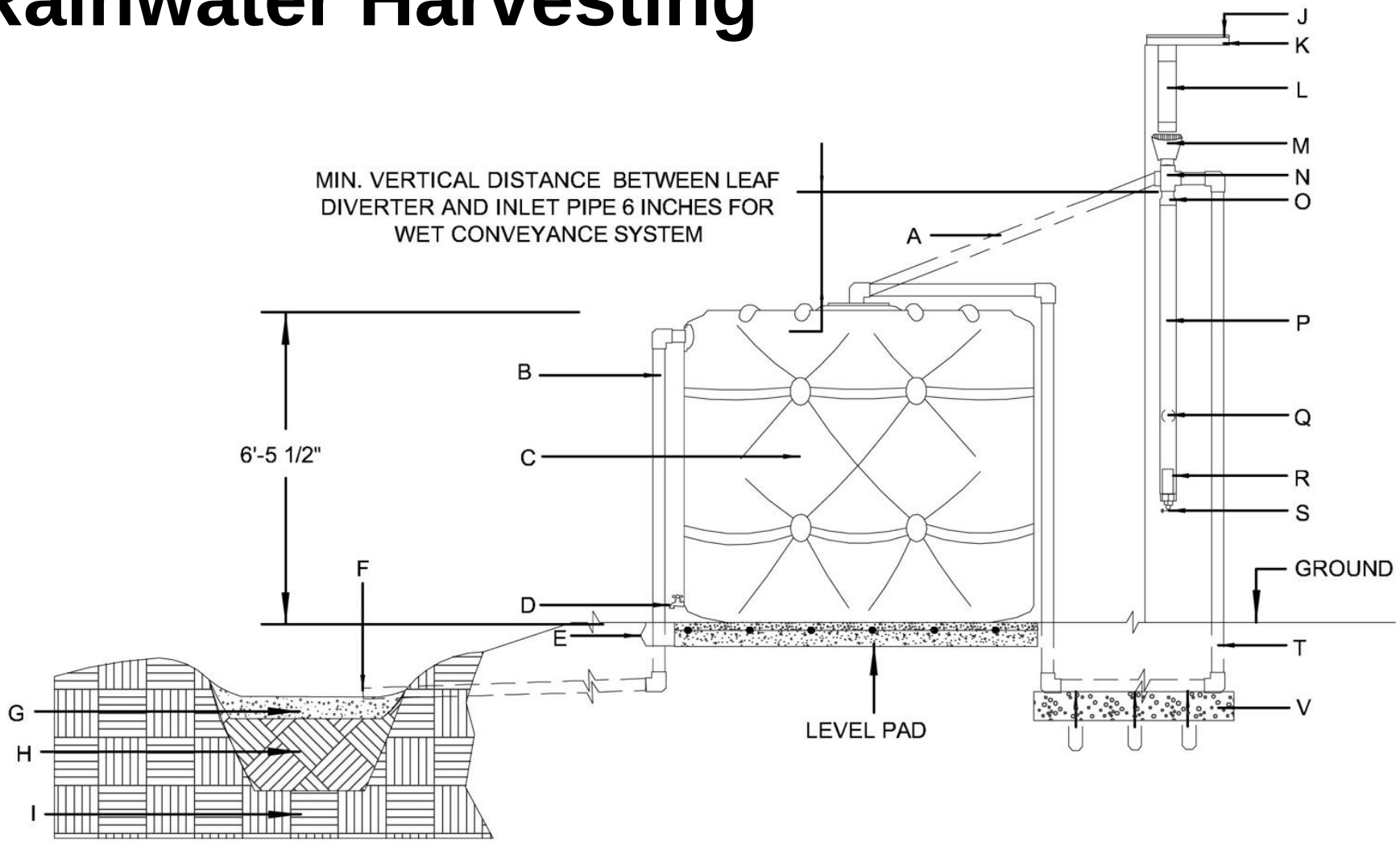

1b RAINWATER HARVESTING DETAIL (OPTIONAL)

SCALE: NONE SHEET 2 OF 2

SHERWOOD DESIGN ENGINEERS

SHERWOOD
DESIGN ENGINEERS

Froste Wistrom
Landscape Engineer

625 2nd Street, Ste 209, Petaluma, CA 94952
Main: 415.677.7300 x206 | Direct: 415.692.0213
fwistrom@sherwoodengineers.com | www.sherwoodengineers.com